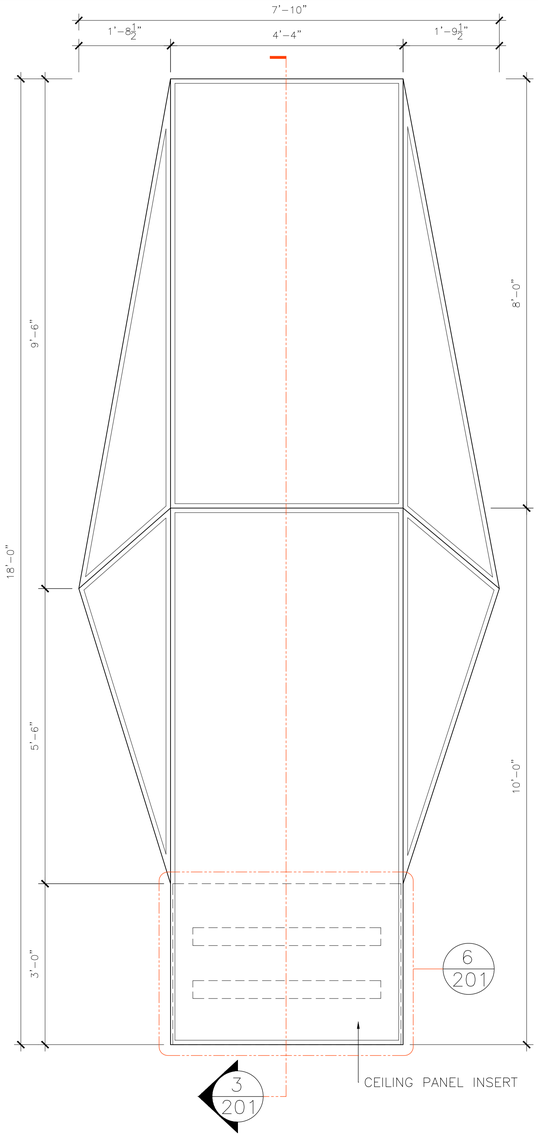

1 / 201 DOOR ARIAL PLAN
SCALE: 3/4" = 1'-0"

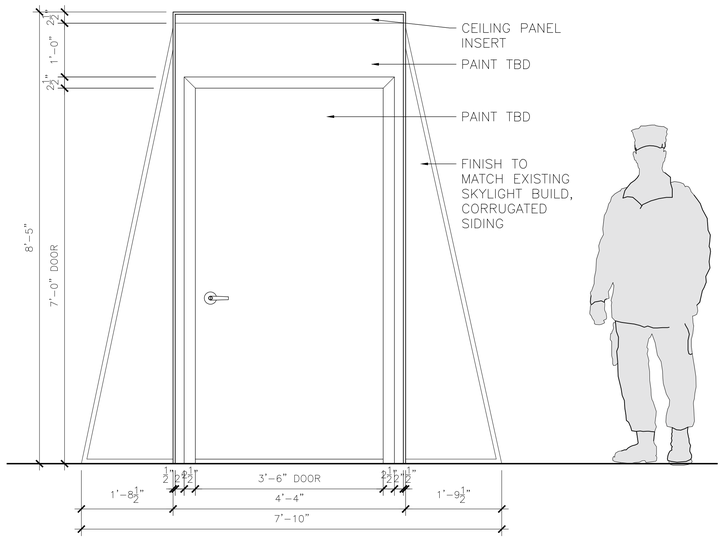

2 / 201 DOOR SHELL FRONT ELEVATION
SCALE: 3/4" = 1'-0"

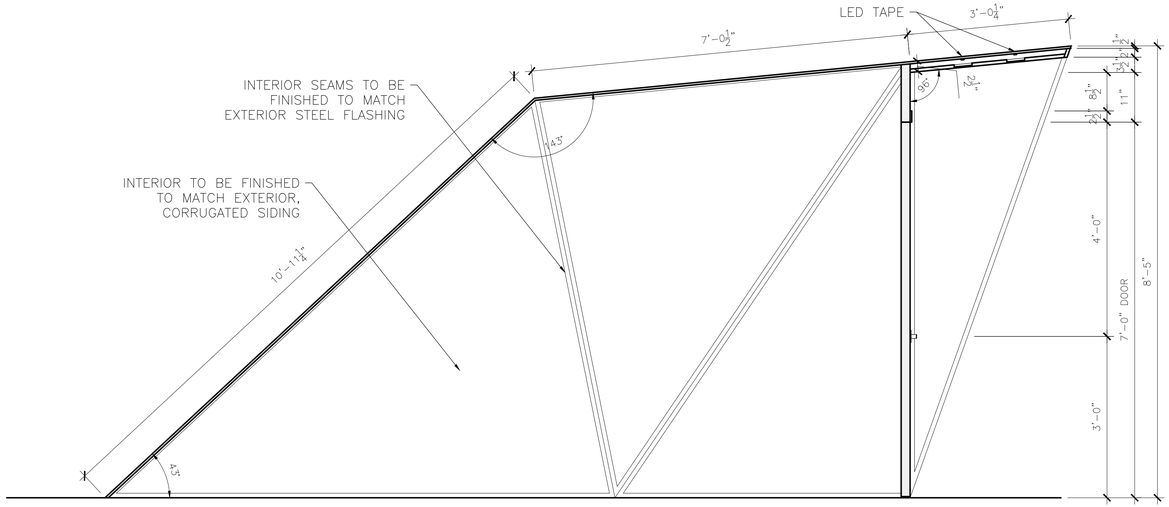

3 / 201 DOOR SHELL SECTION
SCALE: 3/4" = 1'-0"

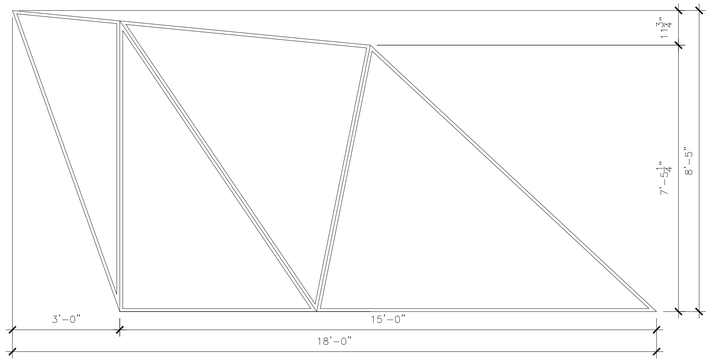

4 / 201 DOOR SHELL SIDE ELEVATION
SCALE: 1/2" = 1'-0"

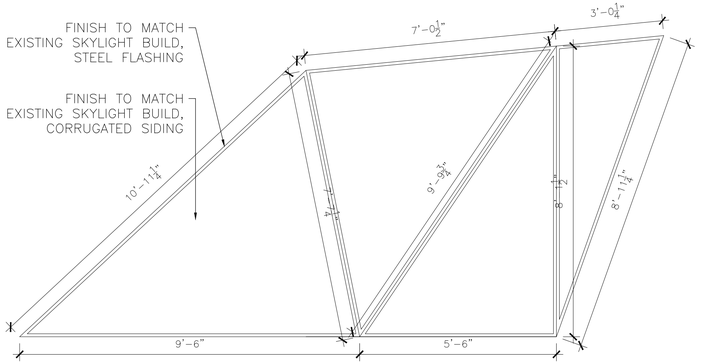

5 / 201 DOOR SHELL SIDE ELEVATION
SCALE: 1/2" = 1'-0"

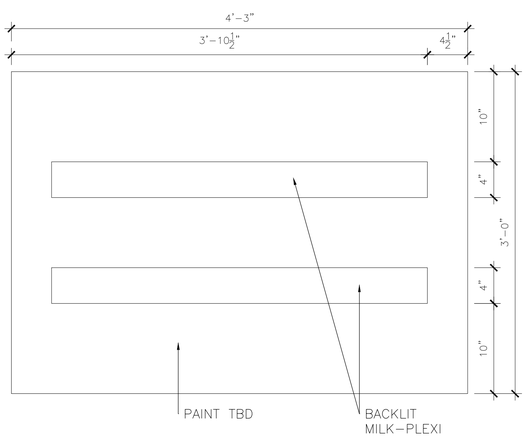

6 / 201 CEILING PANEL INSERT DETAIL
SCALE: 1½" = 1'-0"

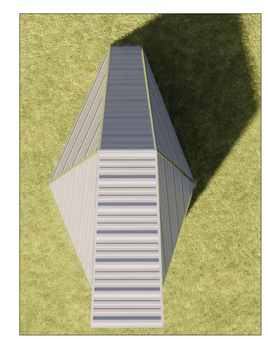

0 / 201 CONCEPT RENDERINGS

ISSUED
OCT 20/22

ORPHAN BLACK: *ECHOES*	ORPHAN BLACK SPINOFF PRODUCTIONS LTD. 2480 STAINFIELD RD. MISSISSAUGA, ON, L9Y1S2 T: 647.689.8010	Production Designer: AIDAN LEROUX	Set name.: EXT. BARROS COMPOUND - GLADE IN THE WOODS	Date: OCT 20, 2022	Scale: AS NOTED	Revised:	Revision no.:	Set no.: 0621	Sheet no.: 201
		Art Director: ALDER DUNLAP	Location address: CLAIREVILLE CONSERVATION AREA, BRAMPTON, ON	Drawn by: E.S.	Sheet name: QUONSET HUT ENTRANCE DETAILS				